TSR30L45CT
TSR30L45CTF

01-Jul-2026

Trench MOS Barrier Schottky Rectifier

TO-220AB
TSR30L45CT

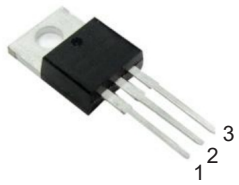

TO-220F
TSR30L45CTF

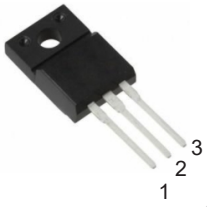

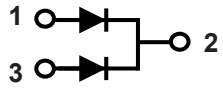

Features

- Advanced trench technology
- Low forward voltage drop
- Low power losses
- High efficiency operation
- Lead Free Finish, RoHS Compliant

Applications

- DC/DC Converters
- AC/DC Adaptors
- Switching Power Supplies
- Freewheeling Diodes

Maximum ratings and electrical characteristics (TJ = 25°C unless otherwise noted)

Parameter			Symbol	Limit		Unit
Maximum repetitive peak reverse voltage			VRRM	45		V
Maximum average forward rectified current		Tatol	IF(AV)	30		A
		Per Diode		15		
Peak forward surge current 8.3 ms single half sine- wave superimposed on rated load per diode			IFSM	280		A
Operating junction and storage temperature range			T_J, T_{STG}	-40 to +150		°C
Typical thermal resistance per leg		TO-220AB	$R_{\Theta JC}$	2		°C/W
		TO-220F		4		
Instantaneous forward voltage per diode				TYP.	MAX.	
	IF=3A	TJ=25°C	VF(1)	0.35	0.40	V
	IF=3A	TJ=125°C		0.30	-	
	IF=15A	TJ=25°C		0.46	0.55	
	IF=15A	TJ=125°C		0.40	-	
Instantaneous reverse current per diode at rated reverse voltage		TJ=25°C	IR(2)	1	100	uA
		TJ=125°C		-	10	mA

Notes:

(1) Pulse test: 300 μs pulse width, 1 % duty cycle

(2) Pulse test: Pulse width ≦ 40 ms

Ratings And Characteristics Curves (TA = 25 °C unless otherwise noted)

FIG.1-Current Derating, Case

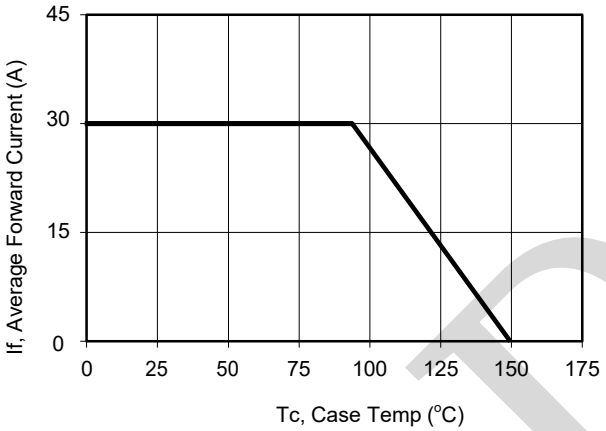

FIG.2-Maximum Repetitive Surge Current

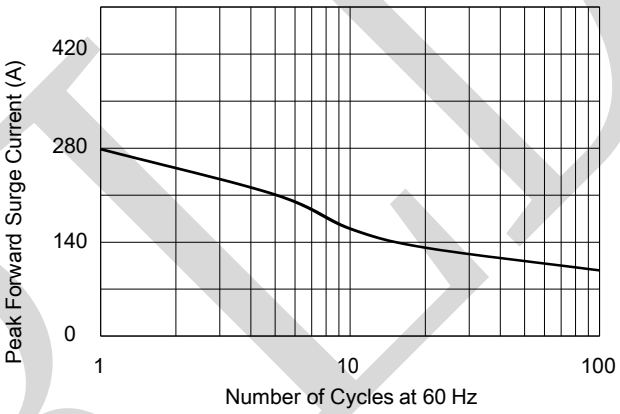

FIG.3-Typical Forward Voltage

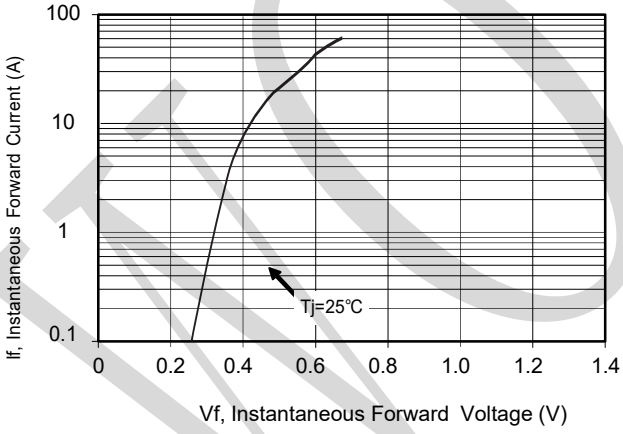

FIG.4-Typical Reverse Current

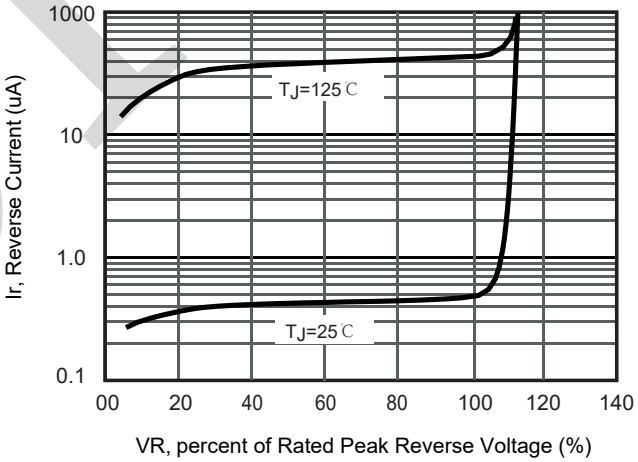

Package Outline Dimensions

Note:unit In(mm)

TO-220AB

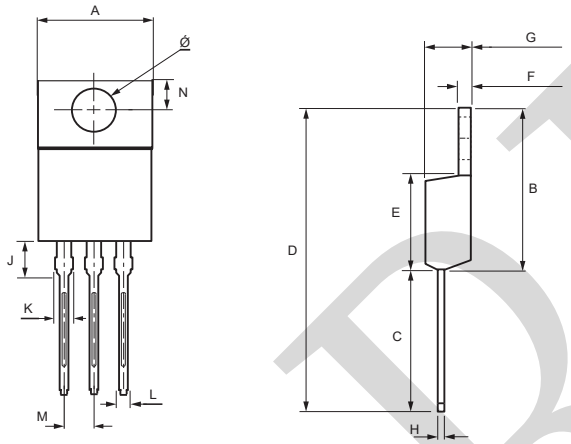

Symbol	Millimeters	
	Min.	Max.
A	9.80	10.80
B	14.20	15.60
C	12.90	14.50
D	27.10	30.10
E	8.20	9.20
F	1.05	1.45
G	4.20	4.90
H	0.30	0.60
J	2.40	4.10
K	1.05	1.50
L	0.55	0.95
M	2.20	2.80
N	2.50	3.00
Ø	3.65	3.95

TO-220F

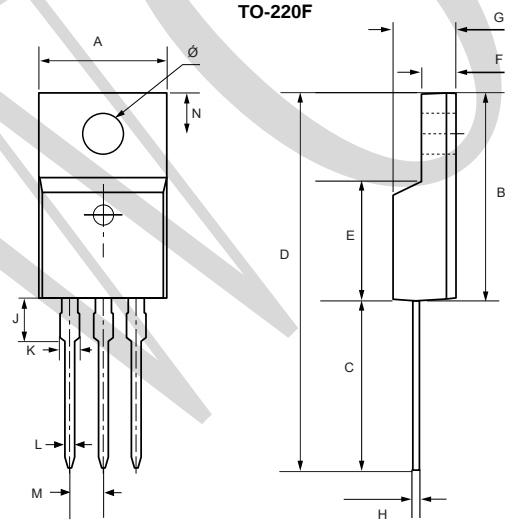

Symbol	Millimeters	
	Min.	Max.
A	9.80	10.80
B	14.20	16.20
C	12.60	14.60
D	26.80	30.80
E	8.60	9.40
F	2.25	2.85
G	4.30	5.10
H	0.35	0.75
J	2.30	4.00
K	1.05	1.55
L	0.50	1.10
M	2.40	2.90
Ø	2.90	3.50

WORLD

Marking Information

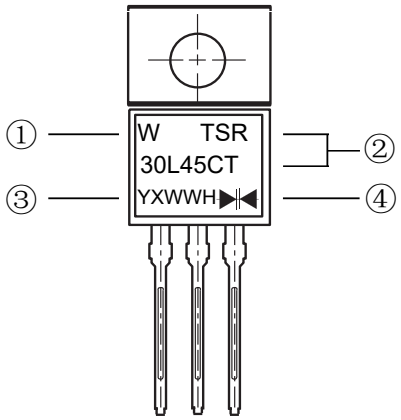

①W : Company's trademark
②Product model : TSR30L45CT or TSR30L45CTF
③PDC information：

Y X WW H
- H:Halogen-free
- WW:Week code(01 to 53)
- X:Internal identification code
- Y:Year code(ex:0=2020)

④ Double wafer

Packaging Information

1.Tube Dimensions



2.Inside Box

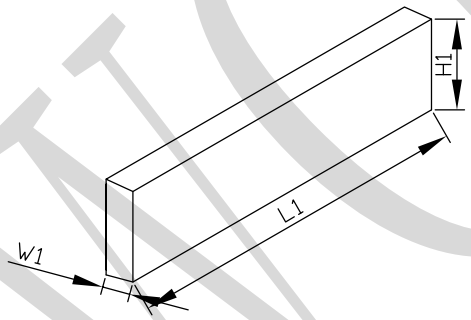

3.Outside Box

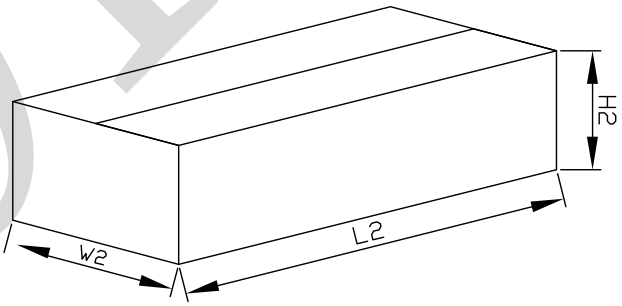

Packaging Information

NO	UNIT	Tube Dimensions			Inside Box			Outside Box		
Size	mm	A	B	C	L1	W1	H1	L2	W2	H2
		530	7	33	570	46	150	590	260	180
QTY	PCS	50PCS/Tube			Smallest package,1000PCS, 20 tube in total			5,000PCS/carton,5 boxes in total		
Note	Tolerance ≤20mm,±3mm; 21-100mm,±5mm; 101-500mm,±10mm									

Revision Histor			
Date	Revision	Description & changes	Author
2017.11.23	1.0	Initial version	Sun
2019.11.23	1.1	Add printed characters	Sun
2026.07.01	1.2	Version updating	Tang

WORLD